This drawing is the sole property of Miether Bearing Products and contains confidential and proprietary information. It is being provided to you for your use and may not be disclosed to any third party or used for any other purpose without Miether's prior written consent. The [materials] must be returned to the Company upon its demand. Your acceptance of these materials constitutes your acceptance of the foregoing terms.

C-14594

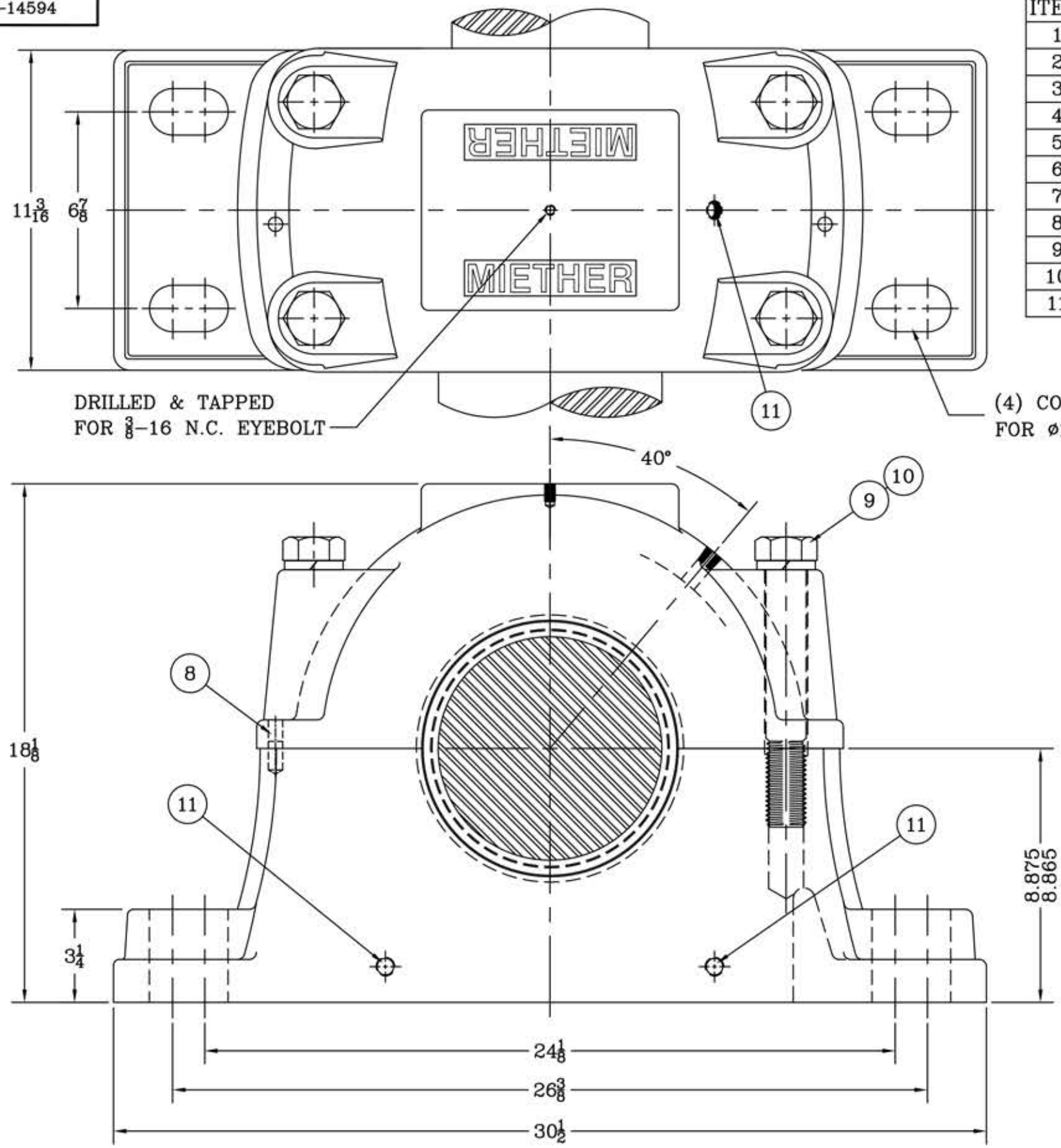

ITEM	DESCRIPTION	DETAIL	REQUIRED FXD.	REQUIRED FLT.
1	HOUSING SDAF 336	C-15228-R	1	1
2	SPHERICAL ROLLER BEARING	22336/W-33	1	1
3	STABILIZING RING SR-0-36	A-11459	1	0
4	LOCKNUT AN-36	B-10422	1	1
5	LOCKWASHER W-36	00252	1	1
6	TRIPLE SEAL RING LER-234	A-16163	1	1
7	TRIPLE SEAL RING LER-223	A-16785	1	1
8	DOWEL	$\phi\frac{1}{2}$ x 1" LONG	2	2
9	CAP BOLT HEX. HEAD	$1\frac{1}{4}$-7 NC x 9" LONG	4	4
10	LOCKWASHER	$1\frac{1}{4}$ SPLIT MED.	4	4
11	PIPE PLUG	$\frac{3}{8}$-18 NPT	5	5

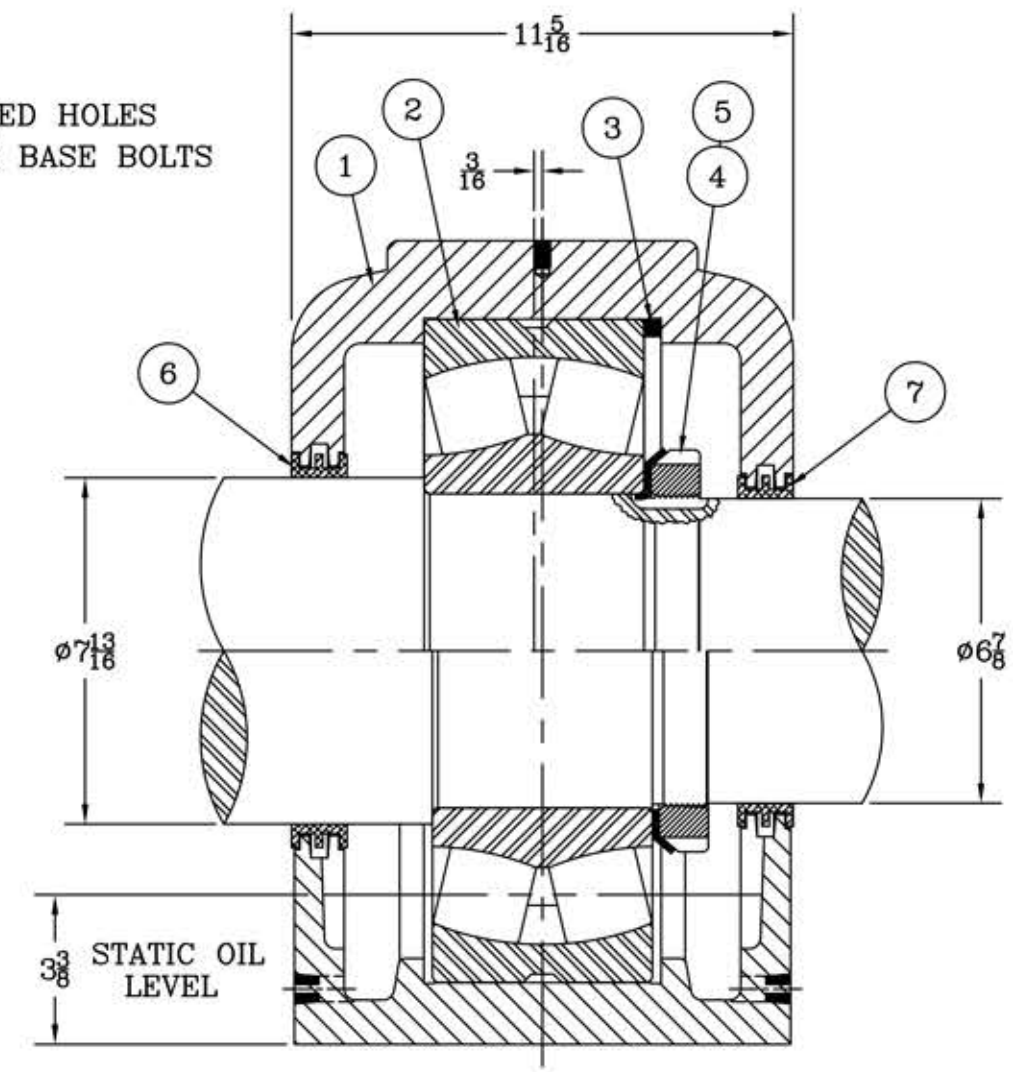

REVISIONS

TOLERANCE: UNLESS OTHERWISE SPECIFIED
FRACTIONS +- 1/32" ANGLES +- 0° 30'
DECIMALS +- .005" WELD +- 1/16"
CASTING +- 1/16"

A.I.S.I. STANDARD FINISHES

SYMBOL	C	D	E	F	G	J	K
MICRO-INCH VALUE	16	32	63	125	250	500	1000

MIETHER™ BEARING PRODUCTS
AN ALCO INDUSTRIES COMPANY
ODESSA, TX. USA

SDAF 22336 07-13 x 06-14
ASSEMBLY DRAWING

SCALE 1 = 3	ASSEMBLY NO.
DRAWN RWB	
DATE 4/29/03	DRAWING NO. C-14594
CHK:	